SONAGES RACK 2U

	SON 24V 6A MS40 RACK	SON 24V 12A MS150 RACK	SON 48V 12A MS150 RACK
	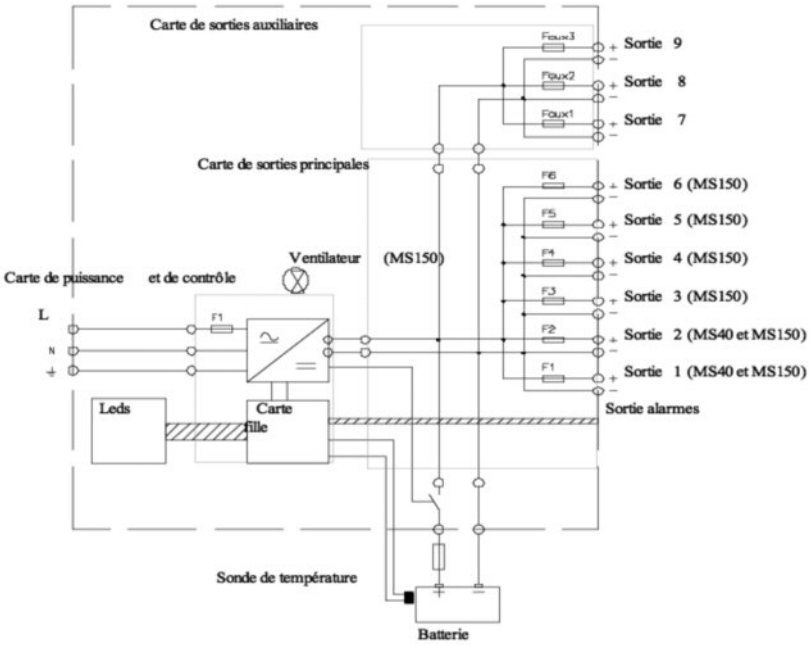		
Maximum power for all outputs	960W	3600W	7200W
Number of amplifier outputs	2	6	6
Maximum power per amplifier outputs	480W	960W	1920W
Number of controller outputs	3	3	3
Maximum power per controller outputs	120W	120W	240W
> Mains			
Mains voltage	230V+/-15% (195 à 264V)		
Frequency	47 à 63Hz		
Power at full load	190W	380W	760W
Efficiency at full load	84%	87%	91%
Efficiency at 20% of load	74%	82%	86%
Neutral and earthing systems	TT, TN, IT		
Class	class I		
> Output			
Floating voltage set at half load and 25°C	27.2V	27.2V	54.4V
Nominal output rectifier current	6A	12A	12A
Current limitation - short circuit current:	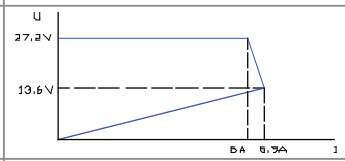	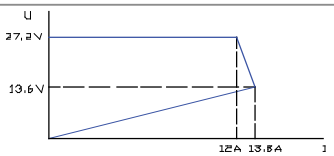	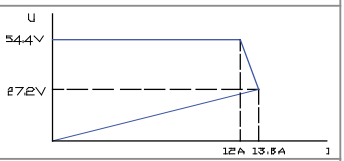
Peak to peak HF residual voltage (20MHz-50Ω)	< 4% of floating voltage		
RMS LF residual voltage	< 0.2% of floating voltage		
Static and dynamic regulation characteristic	< 5% of floating for mains voltage and output load (from 10 to 90%)		

11, Rue Jean Elysée Dupuy - BP 66 - 69543 CHAMPAGNE AU MONT D'OR Cedex FRANCE
Tel. : +33 (0)4 78 66 63 60 - Fax : +33 (0)4 78 47 54 33 - E-mail : comm@slat.fr - www.slat.fr

Power supplies
DESIGNER OF RELIABLE POWER SUPPLIES

	SON 24V 6A MS40 RACK	SON 24V 12A MS150 RACK	SON 48V 12A MS150 RACK
> Battery			
Minimum battery capacity	24Ah	65Ah if jumper is on '50' position 86Ah if jumper is on '75' position	
Maximum battery capacity	110Ah	225Ah	
Low battery voltage protection	When the mains isn't present, a relay disconnects battery from main outputs and auxiliary outputs to protect it against deep discharge when the battery voltage reaches low voltage disconnection threshold. The charger is switched on and the relay is reconnected when mains is back and the load is < rectifier current. In case of discharger (total current on outputs >rectifier current) with mains present, the relay disconnects battery from main outputs and auxiliary outputs when the battery voltage reaches low voltage disconnection threshold . When the load is <rectifier current, the charger is switched on and the relay is automatically reconnected. After disconnection, the battery current is nearly 0.		
	Low voltage disconnection threshold: 21.6V+/-3%		Low voltage disconnection threshold: 43.2V+/-3%
Internal impedance threshold of the battery fault	50mΩ +/-10%	- 20mΩ +/-10% if jumper in '50' position - 13mΩ +/-10% if jumper in '75' position	- 40mΩ +/-10% if jumper is on '50' position - 26mΩ +/-10% if jumper is on "75' position
Maximum power for all outputs drawn from the battery	960W	- 2400W if jumper is on '50' position - 3600W if jumper is on '75' position	- 4800W if jumper is on '50' position - 7200W if jumper is on '75' position
		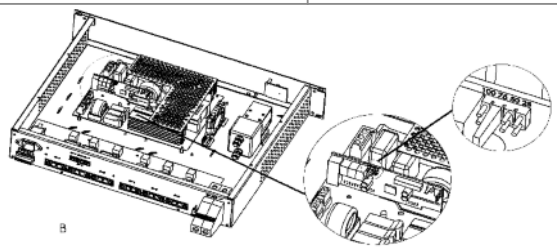	
Battery temperature compensation	The output battery voltage is compensated by the battery temperature (sensor placed as close as possible). If the sensor is broken or disconnected or has short circuit, the battery voltage isn't compensated		
Own rectifier consumption	140mA	430mA	290mA
> Connection			
Mains	2.5mm² plug-in (IEC320) and lockable		
Main outputs	16mm² plug-in and lockable		
Auxiliary outputs	2.5mm² plug-in		
Battery output	16 mm² plug-in and lockable	50 mm²	
Alarm outputs	1.5mm² plug-in 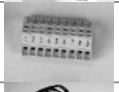		
Temperature sensor	1.5mm² plug-in		
> Protections			
Against unintentional battery reverse	- **At start-up**: the battery is not connected - **During functioning**: the fuse F8 (5 x 20, rated:6.3A, type T) on the power and control board blown	- **At start-up** the battery is not connected - **During functioning**: the fuse F8 (5 x 20, rated:12.5A, type T) on the power and control board blown	

	SON 24V 6A MS40 RACK	SON 24V 12A MS150 RACK	SON 48V 12A MS150 RACK
> Protections			
Against battery wiring error	- **If battery voltage** > 30V+/-3%, the battery is not connected - **If battery voltage** < 14V+/-3%, the battery is not connected		- **If battery voltage** > 60V+/-3%, the battery is not connected batterie - **If battery voltage** < 40V+/-3%, the battery is not connected
Against output over-voltage	- **Regulation problem:** by power supply switch off and cyclic restart on. The threshold is 28.8V+/-3% - **External:** by transient voltage suppressor		- **Regulation problem:** by power supply switch off and cyclic restart on. The threshold is 57.6V+/-3% - **External:** by transient voltage suppressor
Against output over current and short circuit by fuse on each outputs	- **main outputs:** • dimensions: 10.3 x 38 • rating: 20A • type: gG - **auxiliary outputs:** • dimensions: 5 x 20 • rating: 5A • type: F	- **main outputs:** • dimensions: 10.3 x 38 • rating: 32A • type: gG - **Auxiliary outputs:** • dimensions: 5 x 20 • rating: 5A • type: F	
Against internal short-circuit by primary fuse	• dimensions: 5 x 20 • rate: 2A • type: T • breaking capacity: 1500A	• dimensions: 5 x 20 • rate: 6.3A • type: T • breaking capacity: 1500A	• dimensions: 5 x 20 • rate: 8A • type: T • breaking capacity: 1500A
Against primary over voltage	275V		
Against internal high temperature (65°C)	no	yes	yes
> Fonctionnal characteristics			
Alarms and signalisations	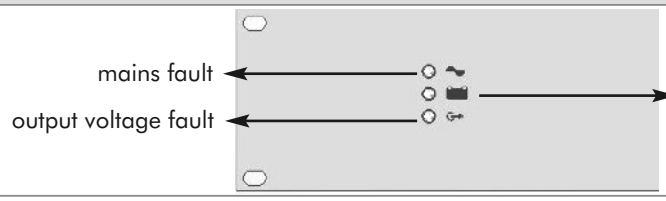		
Mains	**Led indication:** 1- Green: Ok 2- Yellow: Mains fault active		
	Fault if : - mains voltage threshold <185V+/-5% as long as the charger was switched off, <165V+/-5% when the charger was switched on - no primary fuse or fuse blown - power supply is broken - internal temperature is too high		
Batterie	**Led indication:** 1- Green: Ok 2- Yellow: Battery fault active		
	Fault if : - no battery - high impedance on battery and its associated circuit - battery voltage < 23.5V+/-3% mains present		- no battery - high impedance on battery and its associated circuit - battery voltage < 47V+/-3% mains present
	Internal impedance threshold: - 50mΩ +/-10%	- 20mΩ +/-10% if jumper on '50' position - 13mΩ +/-10% if jumper on '75' position	- 40mΩ +/-10% if jumper on '50' position - 26mΩ +/-10% if jumper on '75' position

	SON 24V 6A MS40 RACK	SON 24V 12A MS150 RACK	SON 48V 12A MS150 RACK
> Fonctionnal characteristics			
Battery		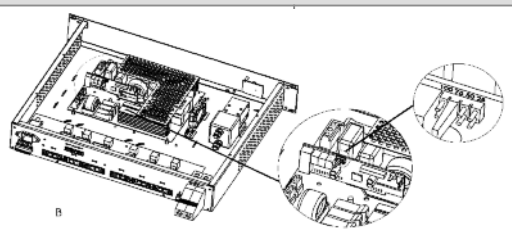	
	Battery fault monitoring - Detection of the presence/absence of the battery : 1 test every 30s during the first 20 min and every 15min after (in normal operation). As soon as a fault detection, the test is every 30s until no fault. - Measurement of the impedance of the battery and its associated circuit: 1 test every 4 hours the mains is present on the power supply and if the power supply has a current < rectifier current		
Output	**Led indication:** 1- Green: Ok 2- Yellow: Output voltage fault active **Fault** when one of the auxiliary or main outputs fails		
Alarm reports	Each alarm can be transmitted by dry contacts free of potential (C-NO-NC) allowing 1A @ 24Vdc, 0.5A @ 120Vac		
> Mechanical characteristics			
Dimensions	The housing is a 19'', 2U rack with connections on the back side. The deepth without connectors is 344mm, and 399 with connectors.		
Weight	3.1kg	5.4kg	5.9kg
IP (front side)	IP30		
> Spécifications environnementales			
Température	**Storage**: -25 à +85°C **Operating** : -5 to +45°C		
	Natural cooling	Forced cooling	
Hygrometry	**Storage:** relative humidity from 10 to 95%, **Operating:** relative humidity from 20 to 95% with no condensation.		
Altitude	Over 2000m, the max operating temperature decreases of 5°C every 1000m		
Lifetime	200000h with external ambient temperature of 25°C, nominal mains voltage, 48h full charging per year and for the rest of the time: 25% of load.		
> EN 5 safety EMC			
Specific standards	- **EN 54-4** *(décember 1997)* / A2 *(february 2006)* : Fire detection and fire alarm systems. Part 4: power supply equipment - **NF EN 12101-10** *(january 2006)* : Smoke Part 10 power supply equipment. A-class.		
Security	- **EN 60950-1** *(september 2006)*: Information technology equipment - Safety Part 1: General requirements		
EMC – Immunity	- **EN 50130-4** *(april 1996)* + A1 (august 1998) + A2 *(april 2003)* : Immunity requirements for fire, intruder and social alarm systems - **EN 61000-6-1** *(march 2007)*: Generic standards - Immunity for residential, commercial and light-industrial environments - **EN 61000-6-2** *(january 2006)*: Generic standards - Immunity for industrial environments		
EMC - Emission	- **EN 61000-3-2** *(august 2006)* (class A): limtes for harmonic current emissions (equipment input current < 16A per phase) - **NF EN 61000-6-3** *(mars 2007)*: Generic standards - Emission standard for residential, commercial and light-industrial environments - **EN 61000-6-4** *(march 2007)*: Generic standards - Emission standard for industrial environments. - **EN 55022** *(march 2007)* + A1 *(may 2008)* (level: class B): Information technology equipment - Radio disturbance characteristics - Limits and methods of measurement		
n° CE DPC	0333-CPD-075382	0333-CPD-075381	0333-CPD-075383

CH-42TN

The EN 54-24 ceiling loudspeaker CH-42TN is designed for flush in suspended ceiling and ideal for an even sound distribution. The loudspeaker has a built-in protection to ensure that, in the event of a fire, damage to the loudspeaker does not result in failure of the loudspeaker circuit which is connected. In this way, system integrity is maintained and ensuring loudspeakers connected in the same circuit in other areas can still be used to inform people of the situation.

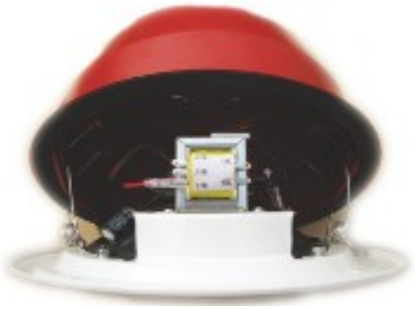

Features of CH-42TN :

- The loudspeaker can be easily installed by using the mounting spring attached.
- Fire dome is mounted in the speaker using the sliding brackets and the wing nuts.
- Equipped with thermal fuse and heat-resistant, high-temperature wiring
- Compliance with EN54 part 24.
- The loudspeaker is available with or without capacitor.

Technical Specifications:

Model	LDACH42TNS01
Max power	9 W
Rated power	6 W
Power taps @ 100V	6 W / 3 W / 1.5 W / 0.75 W
Power taps @ 70V	3 W / 1.5 W / 0.75 W/ 0.375 W
SPL (1W / 1m, 100 Hz - 10k Hz)	91dB
SPL (1W / 4m, 100 Hz - 10k Hz)	79 dB
SPL (6W / 4m, 100 Hz - 10k Hz)	88 dB
Frequency response (- 10 dB)	180 Hz-20K Hz
Dispersion angle (1k Hz / -6 dB)	175°
Rated input voltage	100 V / 70 V
Rated impedance	1.7 k Ω/ 3.3 K Ω / 6.7k Ω / 13k Ω
Connection	Ceramic terminal
Dimensions	Φ 181 mm x 129 mm
Diameter of speaker	5"
Weight	1.29 Kg
Colour	White RAL 9003) y Red(RAL 3000)
Thermal Fuse	150°

CH-42TN

Frequency response:

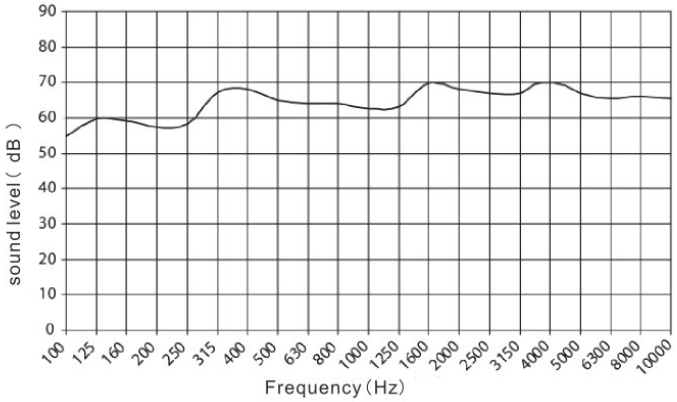

Polar Diagram:

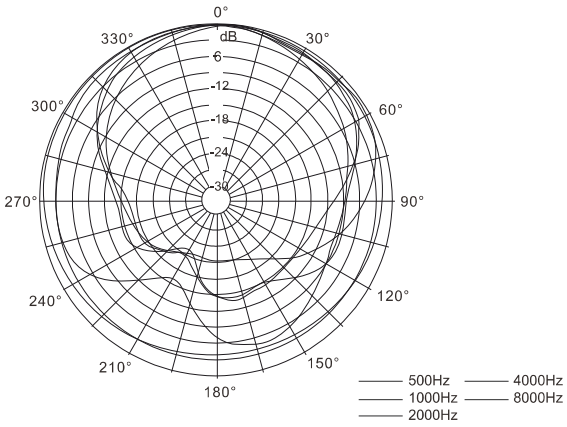

CH-42TN

Circuit Diagram:

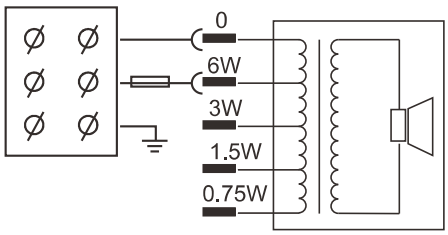

Main mechanical views:

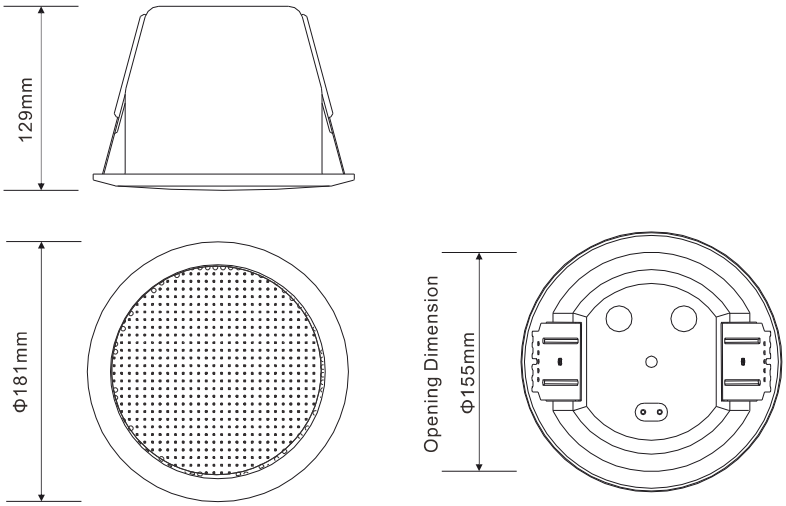

MPS-8Z

El MPS- 8Z es un micrófono multizona de altas prestaciones para el sistema de evacuación por voz y megafonía de NEO.

Hasta 8 Micrófonos MPS-8Z se pueden conectar en una configuración de bus através del ASCI bus del sistema de NEO, utilizando un cable CAT5. El ASCI bus permite una distancia máxima de 800m y ofrece niveles de prioridad entre los dispositivos conectados en bus. El MPS puede ser monitorizado y configurado de forma remota.

Cuenta con 8 botones de software programables de paginación para un máximo de 8 zonas.

Cuenta con funciones como “llamar a todos”, señal de linea ocupada y permiso para hablar. Además, incluye 3 botones de funciones programables que, combinado con los botones de zonas permite una amplia variedad de funciones del sistema tales como el lanzamiento de mensajes pregrabados o carga de presets.

El procesamiento de sonido se ha configurado para obtener resultados de alta calidad en la paginacion de la voz, en términos de distorsión, sensibilidad, el ancho de banda y la relación de señal/ ruido.

Tiene un chasis de hierro para proporcionar una estabilidad y protección contra daños superior. Todos los botones están diseñados para un uso intensivo.

Características del MPS-8Z:

- 8 botones de zona programables.
- 3 botones de funciones programables.
- Puede ser controlado por ACSI bus (conector RJ-45)
- Cápsula de micrófono duradero de alto rendimiento.
- Indicador LED y display del micrófono y sistema NEO (FLT, EMG o PA).
- Indicador de zona ocupada y de la palabra concedida.
- Fuente de alimentación por fuente local.

Vista Trasera, Lateral y Frontal:

Especificaciones Técnicas:

Modelo	LDAMPS8ZS02
Fuente de Alimentación	5V dc, Tipo A/B Conector MiniUSB
Consumo de Energía	1A
Respuesta de Frecuencia	200- 15000 Hz (+/-2dB).
Ratio de Señal/Ruido	R> 98dB, A-ponderado
Sensibilidad	-43 dB. a 1KHz
Axis Direccional	Axial con respuesta diagrama hipercardioid polar.
Tipo de Transductor	Condensador
Indicadores	Estado: Emergencia, Fallo, Link, Ocupado, Linea Ocupada, Palabra concedida. 8 indicadores de zona seleccionada. Gooseneck incluye anillo luminoso para la palabra concedida.
Botones	3 x funciones programables, 1 x recall, 1 x seleccionar/ des-seleccionar todas las zonas, 8 x selección de zonas, 1 x llamar.
ACSI Bus	2 x Audio Balanceado (In+Loop)1Vp, 0,707Vrms. 10 KΩ, 2 x RJ-45 Female, Total 800m. / 2624,7ft
Aux Mic Entrada	1 x de entrada no Balanceada, 15mV, 47 KΩ, 1 x Minijack Mono 2,5mm
Dimensiones sin gooseneck (W x H x D)	95 x 65 x 190 mm / 3,75”x 2,56”x 7,48”
Longitud Gooseneck	350mm / 13,78”
Condiciones de Operación	-5 ºC to +45 ºC / 23 ºF to 113 ºF 5% to 95% Humedad relativa (sin condensación)
Acabado	Fe, Gris RAL 7016
Peso	0,93 Kg

NEO Extension 8250

LDA NEO Extension 8250 is an extension unit for the EN 54-16 PA/VA system NEO.

This extension unit scales the NEO system with 8 more zones as it includes 8 class D power amplifier channels of 250W at 100V or 70V.

Audio is transmited from the main unit to this extension unit via a daisy-chain connection by Flexnet and using audio over Ethernet. Therefore it guarantees maximum audio quality and integrity in the signal.

The NEO Extension is fully configurable with the NEO-Configurator software (included with NEO). It is possible to configure remotely the unit as part of th whole NEO system and create events to perform actions in the system triggered by conditions of: input level, date&time, UDP command, a GPIO or button from MPS microphone.

General features:

- 8 class D amplifiers of 250W for 70 or 100V lines
- 8 pre-amp outputs for external PA amplifiers connection.
- DSP: 7-band input/output Parametric Equalizer, loudness, LDA sound enhancer, independent volume control per each output channel and audio filters.
- Triple Ethernet port: for Digital Audio Cobranet, remote control and supervision, and for escalating the system with NEO-Extensions in redundant daisy-chain mode with Flexnet technology (up to 1024 zones).
- Control for up to 32 attenuators LDA AT6.
- Integrated frontal loudspeaker for monitoring.
- 12 supervised contact relays for integration with Fire Alarm Control Panel.

Rear View

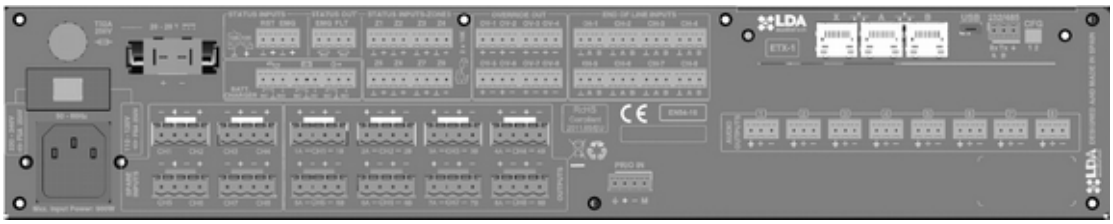

NEO Extension 8250

Technical Specifications:

Model	LDANEO8250ES01
Power supply	110-120V / 220-240V~ 50/60Hz.
Power consumption	900W max / 200W at 1/8 output power/ 40W Standby
Frequency response	80 - 20.000Hz +/-3dB
Signal to noise ratio	>98dB, A-weighted
Distorsion factor	<0,05% under 60268-3
Gain adjustment per channel	-100dB -0dB, 1dB steps
DSP	Integrated. 48 kHz, 24 bits - 344 MIPS
FlexNet (Conbranet+Control)	3 x FlexNet Redundant (automatic switching), Ethernet10/100Mbits. Female RJ-45
Pre-amp Audio Outputs	8 x Balanced audio 1Vp, 0,707Vrms. 100 Ω, 3Pin, Euroblock Type
Rec. Audio / Ctrl. Outputs	1 x Balanced audio, 1Vp, 0,707Vrms. 100 Ω / 0 - 5V DC output 100 Ω, 4Pin, Euroblock Type
ATT Control	8 x Override 24V DC, 8 x 40mA, 2 Pin, Euroblock Type (4 pin connector)
Emergency Control Inputs	10 x 0 - 5V DC, Monitored inputs, 2 Pin, Euroblock Type (4 pin connector)
Emergency Control Outputs	2 x Relay contact Isolated Output, NO, Max 60V DC 130mA, 2 Pin Euroblock Type (4 pin connector)
Amplifier	8 x 250W Class D (8 x125Wrms) @ 70/100V. Min. load per channel: 40 Ω
Speaker Outputs	16 (8 dual managed lines) x 70 /100V. 2 Pin, Euroblock Type (4 pin connector)
Speaker Loop Input	16 (8 dual) x No Voltage Contact inputs, 3 Pin, Euroblock Type.
Spare Amplifier Inputs	8 x 250Wrms @ 70/100V 1, 2 Pin, Euroblock Type (4 pin connector)
Protection	Over-temperature, DC, infrasonic, short circuit, slow start-up, overload. Start-up test.
Emergency Power Input	1 x 20 - 28V DC, 20A, Fused (20A), 2 Pin, Euroblock Type (2 pin connector)
Emergency Power Status Inputs	3 x NO - NC, 3 Pin, Euroblock Type
Operating Condition	-5 ºC to +45 ºC / 23 ºF to 113 ºF 5% to 95% Relative humidity (No condensation)
Finish	Front: Fe, Grey RAL 7016 Back: Fe, Black RAL 9005 Case: Al, Black RAL 9005
Weight	15 Kg / 33,07 lb
Dimensions (W x H x D)	483mm x 88mm x 455mm / 19□x 3,46□x 18□
Accessory	2 x Rack mounting, Male Euroblock connectors, installation screws, 4 x Rubber foot, 1 x Power cable 2m / 6,56ft (EU Type), 1 x Ethernet Cable 2m / 6,56ft.

NEO 8060

LDA NEO 8060 is a compact EN 54-16 certified PA/VA system that ensures a ensures a fast, safe and controlled emergency evacuation.

NEO represents a cost-effective voice evacuation and public address system due to its cutting-edge features, excellent audio quality and flexibility in just 2U: 8 class D amlifiers, 5 audio inputs, 7x8 audio matrix (39x1024 digital), touch screen, Cobranet audio, etc.

With the NEO-Configurator software (included), it is possible to configure the equipment remotely and create events to perform actions in the system triggered by conditions of: input level, date&time, UDP command, a GPIO or button from MPS microphone.

General features:

- 5 audio inputs.
- 8 class D amplifiers with two configurations for 100V/70V lines: 8 class D amplifiers of 120W per channel or 4 class D amplifiers of 250W per channel.
- Audio Matrix 7x8 (digital up to 39x2014).
- 8 pre-amp outputs for external PA amplifiers connection.
- Up to 8 multi-zone microphones MPS-8Z or VAP-1 panels connected with CAT5 UTP cable.
- DSP: 7-band input/output Parametric Equalizer, loudness, LDA sound enhancer, independent volume control per each I/0 channel and audio filters.
- Triple Ethernet port: for Digital Audio Cobranet, remote control and supervision, and for escalating the system with NEO-Extensions in daisy-chain mode with Flexnet techlogy (up to 1024 zones).
- 4,3" Frontal touch screen with access control.
- 4GB of internal memory for pre-recorded messages.
- Integrated emergency microphone.
- Control for up to 32 attenuators LDA AT6.
- Integrated frontal loudspeaker for monitoring.
- 22 GPIO ports (8 supervised for integration with Fire Alarm Control Panel).

Voice Alarm/Emergency Features:

- Certified with EN 54-16 and EN 60849.
- Detection and indication of failure in all emergency functions.
- Integration with Fire Alarm Control Panels.
- Pre-recorded evacuation messages.
- Phased evacuation.
- Manual control of emergency states with access control.
- Recording output in emergency state.
- Emergency Log.
- Loudspeaker line supervision.
- A+B connection (16 lines).
- Back up amplifier conection: 7+1 (120W channels) or 4+1 (250W channels).

Rear View

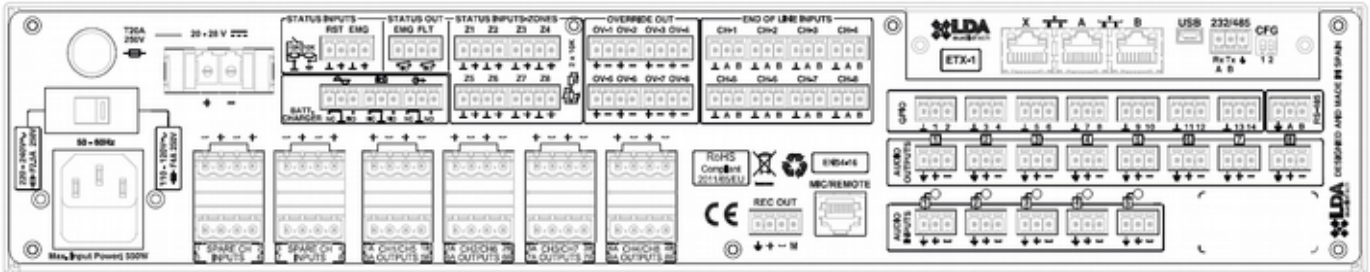

NEO 8060

Technical Specifications:

Model	LDANEO8060S02
Power supply	115 / 230V~ 50/60Hz
Power consumption	550W max / 100W at 1/8 output power
Frequency response	20 - 20.000Hz +/-1dB
Signal to noise ratio	R>98dB, A-weighted
Distorsion factor	<0,05%
Gain adjustment per channel	-100dB -0dB, 1dB steps
DSP	Integrated. 48 kHz, 24 bits - 344 MIPS
FlexNet/ Cobranet	2 x FlexNet Redundant (automatic switching)/ Cobranet,Ethernet10/100Mbits. Female RJ-45
Audio Inputs	5 x Balanced audio 1Vp, 0,707Vrms. 10 KΩ, 3Pin, Euroblock Type
LDA ACSI Bus	1 x Balanced audio 1Vp, 0,707Vrms. 10 KΩ, Female RJ-45, Total 800m. / 2624,7ft
Pre-amp Audio Outputs	8 x Balanced audio 1Vp, 0,707Vrms. 100 Ω, 3Pin, Euroblock Type
Rec. Audio / Ctrl. Outputs	1 x Balanced audio, 1Vp, 0,707Vrms. 100 Ω / 0 - 5V DC output 100 Ω, 4Pin, Euroblock Type
ATT Control	8 x Override 24V DC, 8 x 40mA, 2 Pin, Euroblock Type (4 pin connector)
Emergency Control Inputs	10 x 0 - 5V DC, Monitored inputs, 2 Pin, Euroblock Type (4 pin connector)
Emergency Control Outputs	2 x Relay contact Isolated Output, NO, Max 60V DC 130mA, 2 Pin Euroblock Type (4 pin connector)
General control (GPIO)	14 x Control I/O, 0 - 5 V, 100 Ω, 3Pin, Euroblock Type
Virtual matrix	32 x 1024
Amplifier	8 x 120W Class D, 60Wrms x 8 @ 70 / 100V. Min load 166 Ω or 4 x 250W Class D,120Wrms x 4@ 70 / 100V. Min load 83 Ω
Speaker Outputs	16 (8 dual managed lines) x 70 /100V. 2 Pin, Euroblock Type (4 pin connector)
Speaker Loop Input	16 (8 dual) x No Voltage Contact, 3 Pin, Euroblock Type.
Spare Amplifier Inputs	8 x 60Wrms at 70 or 100V, 2 Pin, Euroblock Type (4 pin connector)
Protection	Over-temperature, DC, infrasonic, short circuit, slow start-up, overload. Start-up test.
Emergency Power Input	1 x 20 - 25V DC, 20A, Fused, 2 Pin, Euroblock Type.
Emergency Power Status Inputs	3 x NO - NC, 3 Pin, Euroblock Type
Display	TFT 480x272 4,3" with Touch Panel
Operating Condition	-5 ºC to +45 ºC / 23 ºF to 113 ºF 5% to 95% Relative humidity (No condensation)
Finish	Front: Fe, Grey RAL 7016 Back: Fe, Black RAL 9005 Case: Al, Black RAL 9005
Weight	13,5 Kg / 29.76 lb
Dimensions (W x H x D)	483mm x 88mm x 455mm / 19 x 3,46 x 18
Accessory	2 x Rack mounting, Male Euroblock connectors, installation screws, 4 x Rubber foot, 1 x Power cable 2m / 6,56ft (EU Type), 1 x Ethernet Cable 2m / 6,56ft.

LDAPCM20TNS01_M1_V1

LDAPCM20TNS01

The PCM-20TN is a 20W high-performance unidirectional projection loudspeaker that complies with complies with EN54-24 for voice alarm.

It offers high quality sound reproduction and intelligible broadcast of voice evacuation messages thanks to its high sound pressure level, low distortion and a broad frequency response range. Its high IP ensures reliable operations over wide temperature and humidity ranges making it ideal for indoor or outdoor applications.

Features of the PCM-20TN:

- Complies with EN54-24 standard
- Excellent sound reproduction
- Intelligible voice broadcasting

Technical Specifications:

Model	LDAPCM20TNS01
Max power	30 W
Rated power	20 W
Power tapping	20 W / 10 W / 5 W / 2.5 W @100V 10 W / 5 W / 2.5W / 1.25W @70V
Rated input voltage	100 V / 70 V
Rated impedance	500 Ω / 1K Ω / 2K Ω / 4K Ω
SPL at 20W/1W (100Hz-10kHz)	101 dB (1m) / 89 dB (1m) 89 dB (4m) / 77 dB (4m)
Frequency response	150 Hz ~ 20k Hz (-10 dB)
Connection	Fire-resistant cable
Dimensions	Φ140 mm x195 mm
Weight	2.65 Kg
Color	White (RAL9003)
Speaker size	5.25"
Operating temperature	-25° to +55°

* The reference axis is perpendicular to the centre point of the front grille.

* The reference plane is perpendicular to the centre of the reference axis.

* The horizontal plane is perpendicular to the centre of the reference plane.

* The spec/data was measured using a standard baffle mounting in an anechoic chamber as described in EN54-24

LDAPCM20TNS01_M1_V1

LDAPCM20TNS01

Frequency response:

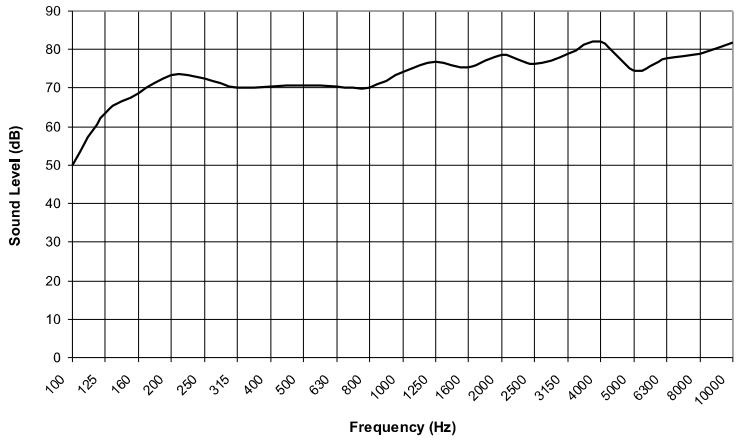

Circuit Diagram

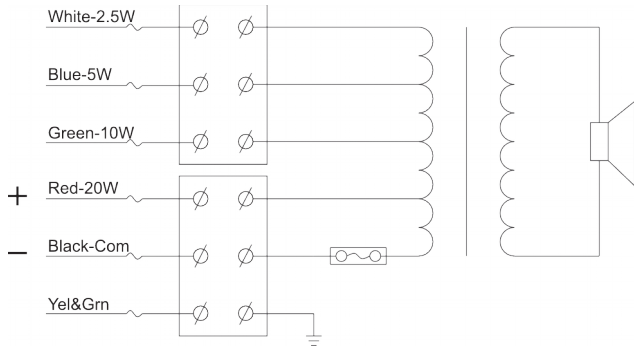

Views

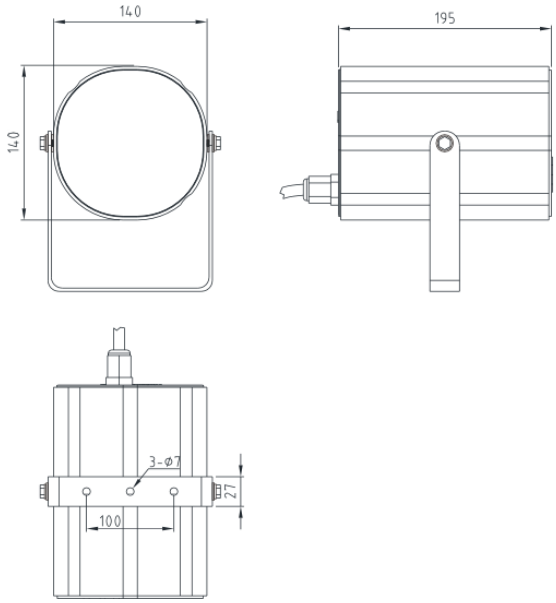

Dispersion angles

		Horizontal	Vertical
1 oct. Pink noise	500 Hz	360º	360º
1 oct. Pink noise	1 kHz	214º	219º
1 oct. Pink noise	2 kHz	116º	116º
1 oct. Pink noise	4 kHz	57º	58º

Installation Instructions and Configuration

LDAPCM20TNS01

Mounting
A durable bracket is provided for quick installation and flexible angle adjustment. Besides, this unidirectional loudspeaker can be ceiling mount with a bracket.

Power Setting
The product comes with a one-meter, fire-resistant six-core cable already attached to the ceramic connector. The cable is a bundle of wires color-coordinated corresponding to the different power taps of the transformer. The cable connector is mounted on the back cover for easy installation.

Installation Instructions

1. Remove the aluminium bracket from the carton and secure it on the ceiling or wall using the three provided mounting screws.

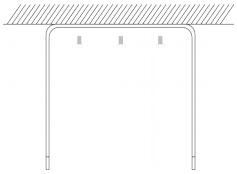

2. Use the screws, gasket and silicone O-ring in the accessory package to secure the speaker to the bracket according to the picture below.

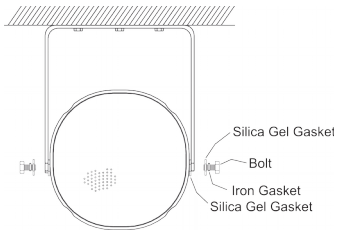

3. Adjust the angle and tighten the screws on both sides.

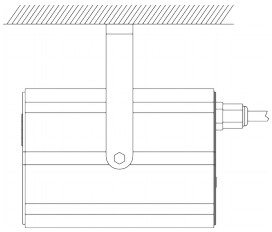

LDA audioTech

LDAPCM20TNS01
Unidirectional Projection Loudspeaker
EN54- 24 Type B

Transformer Power Tapping:

	Red	Green	Blue	White	Black	Yel&Grn
IMP(Ω)	500	1K	2K	4K	Com	GND
100V	20W	10W	5W	2.5W		
70V	10W	5W	2.5W	1.25W		

Other technical data see LDAPCM20TN_M1_V1

CE
0359
14
LDA, Málaga, SPAIN
0359-CPR-00431
DoP No.: CPR-DoP-2014001

RACK-ALT Series

LDA Rack-Alt Series cabinets are available in 10” and 19” in order to meet any need in voice and data installations.

These are multipurpose racks since they can be used for audio equipment, patch panels and electric equipments installations.

Standard models have from 27U to 42U, with 600mm depth and 800mm width, although they can be made with other dimensions according to the final customer's requirements.

Features:

- Steel frames for structure assembly.
- Wiring entrance in top and base.
- Steel supports for profile mounting and shifting.
- 4 19” moveable profiles.
- Accessible side panels.
- Top with side, front and rear vent slots.
- 4mm grey Parsol glass front door in a metallic frame with lock and vent slots.
- Back door with lock.
- Levelling feet or wheels.
- Capacity up to 400 kg.

Technical specifications:

Model	**LDARACK42ALTS01, LDARACK32ALTS01, LDARACK22ALTS01, LDARACK12ALTS01**
Capacity	Up to 19” 42U
Color	Ral 7016 (can be customized)
Dimensions (width x depth)	600x800 mm
Material	Steel
Door	Security glass

RCD-21R

The LDA RCD-21R is an all-in-one multi-audio source player that includes a CD/DVD player, a FM/AM radio, and USB and SD cards interfaces.

It is an energy-efficient and cost-effective equipment that is able to deliver pro-audio level performance.

Features:

- Integrates CD/DVD player, FM/AM and USB and SD interface
- Supports USB 1.1 and USB 2.0
- Independent AM/FM and CD/USB lines output
- Supported audio formats: MP3, WMA, WAV

Technical specifications:

Model	LDARCD21RS03
Inputs	FM antenna : female coaxial RF IEC, 75 Ω AM antenna: male XH2,54-2P, 75 Ω USB: female type A
Frequency bands	FM: 87MHz – 108 Mhz AM: 522KHz – 1620 KHz
Outputs	FM/AM radio: stereo 2 x RCA female (red/white). 2 ± 0,2V CD/USB player: stereo 2 x RCA female (red/white). 2 ± 0,2V
Frequency response	20 Hz – 20.000 Hz
THD distortion	0,05%
SNR	60 dB
Crosstalk	≥ 75dB
Power supply	110 - 240V~ 50/60Hz
Power consumption	< 13W
Operating condition	-5 ºC to +45 ºC / 23 ºF to 113 ºF 5% to 95% relative humidity (no condensation)
Finish	Front: Fe, Gray RAL 7016 Back: Fe, Black RAL 9005 Case: Fe, Black RAL 9005
Net weight	3,2 Kg / 7 lb
Dimensions (Width x Height x Depth	484mm x 44mm x 260mm / 19” x 1,73” x 10,23”
Packaging (Width x Height x Depth)	505mm x 110mm x 315mm / 19,88” x 4,33” x 12,4”
Gross weight	4 Kg / 8,8 lb
Included accesories	2 x rack mounting wings, 4 x rubber feet, 1 x power cable IEC C7 to C type (EU) 2m / 6,56ft long, 1 x power cable IEC C7 to G type (UK) 2m / 6,56ft long, 2 x stereo cable RCA to RCA, 1 x FM antenna, 1 x AM antenna, 1 x IR remote control, 2 x 1,5V AA batteries

VAP 8K

The VAP 8K is an expansion keyboard for the Voice Alarm Panel VAP 1.

It has 8 software programmable buttons for paging to a maximum of 8 zones.

Each VAP can equip up to 7 expansion keyboards through a port on the side that allows the installation on the right side of the main unit. Thus, it can address up to 448 zones.

VAP 8k features:

- 8 software programmable buttons
- Up to 7 can be connected together
- Busy zone indicators
- Metallic chassis that provides stability and protection against damage.
- Local power supply

Technical features:

Model	LDAMPS8KS01
Kind of transducer	Condenser
Buttons	8 x zone selection
Operating Conditions	-5 ºC to +45 ºC / 23 ºF to 113 ºF 5% to 95% Relative Humidity (no condensation)
Finish	Fe, Gris RAL 7016
Weight	0,85 Kg